Fs.Pos	Shot	Elevn.	WIND Est. L	WIND Est. R	Dirn.	True L	True R	CALL	SCORE
	A								
	B								
	1								
	2								
	3								
	4								
	5								
	6								
	7								
	8								
	9								
	10								
	11								
	12								
	13								
	14								
	15								

Dimensions(mm): V-bull 70 Bull 140 Inner 280 Magpie 420 Outer 600

Barrel Count	Rifle:	Ammo.	Score	
	F/sight	E/Eye	B/F	
	B/sight	Filter	Agg.	

Date	Event	Comments:	Coach	Target#	300m
Time	Range				

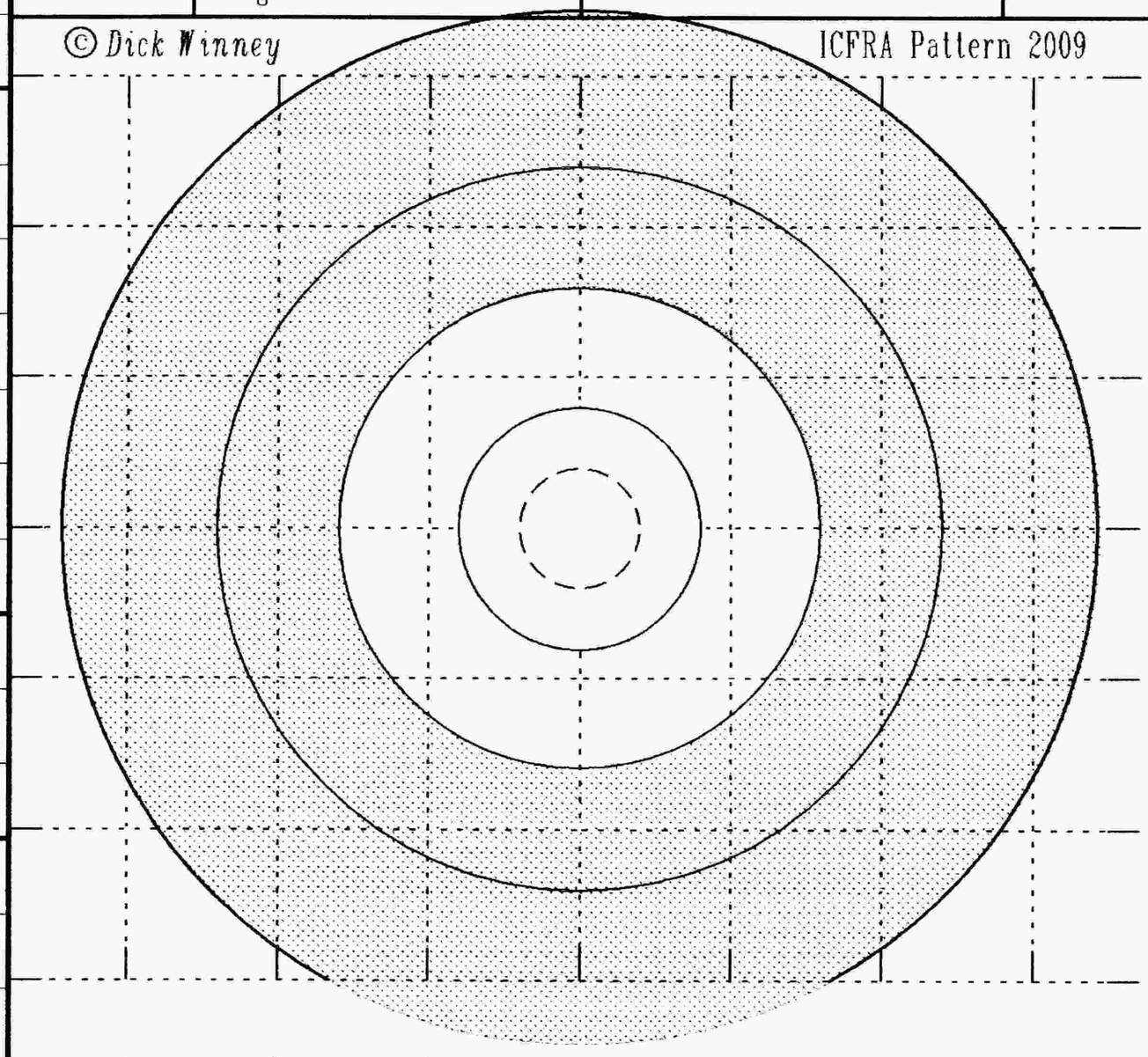

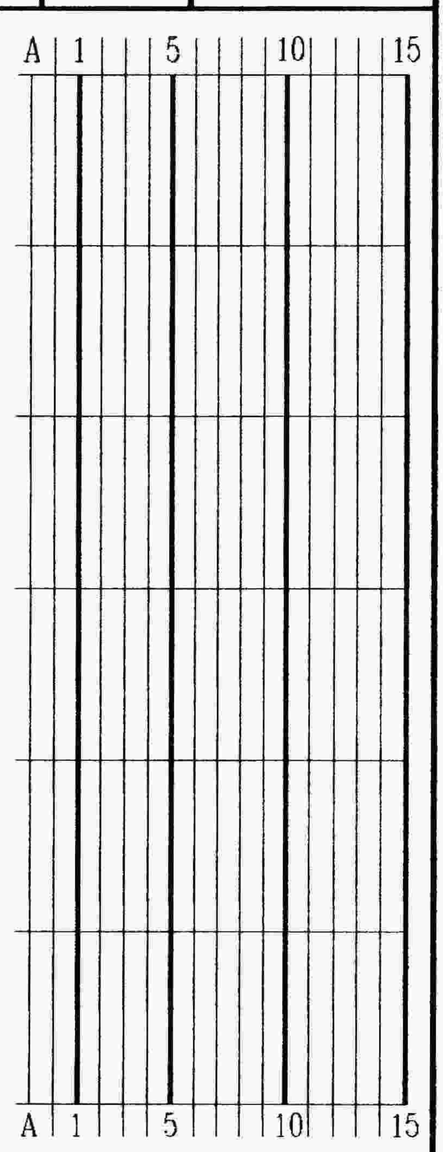

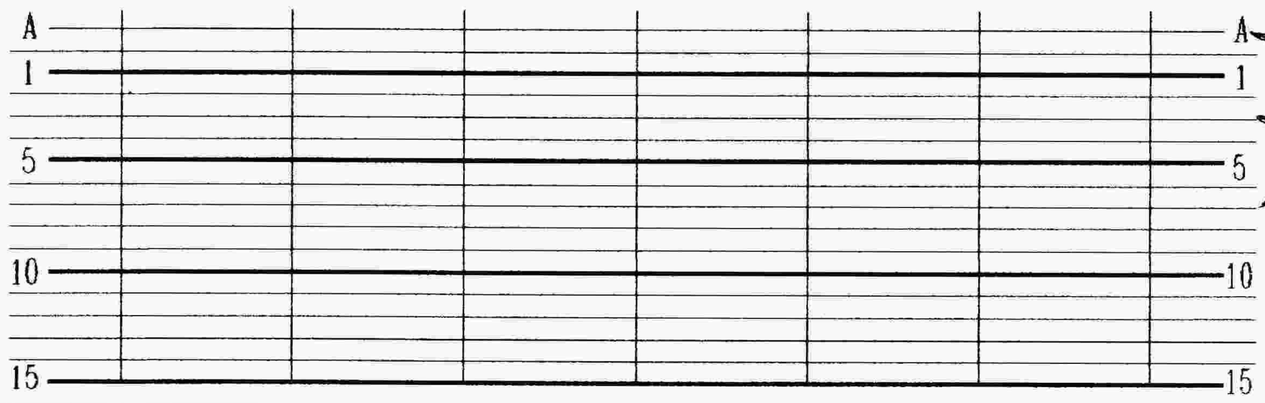

WIND 155gr	1o'c	2o'c	3o'c
VS	2	3	$3\frac{1}{2}$
Str	$1\frac{1}{2}$	$2\frac{1}{2}$	$2\frac{3}{4}$
Fr	1	$1\frac{3}{4}$	$2\frac{1}{4}$
Mod	$\frac{3}{4}$	1	$1\frac{1}{4}$
Sl	$\frac{1}{4}$	$\frac{1}{2}$	$\frac{3}{4}$

RISE 200y $3\frac{1}{2}$

Fs.Pos	Shot	Elevn.	WIND Est. L	WIND Est. R	Dirn.	True L	True R	CALL	SCORE
	A								
	B								
	1								
	2								
	3								
	4								
	5								
	6								
	7								
	8								
	9								
	10								
	11								
	12								
	13								
	14								
	15								

Dimensions(mm): V-bull 70 Bull 140 Inner 280 Magpie 420 Outer 600

Barrel Count	Rifle:	Ammo.	Score	
	F/sight	E/Eye	B/F	
	B/sight	Filter	Agg.	

Date	Event	Comments:	Coach	Target#	300m
Time	Range				

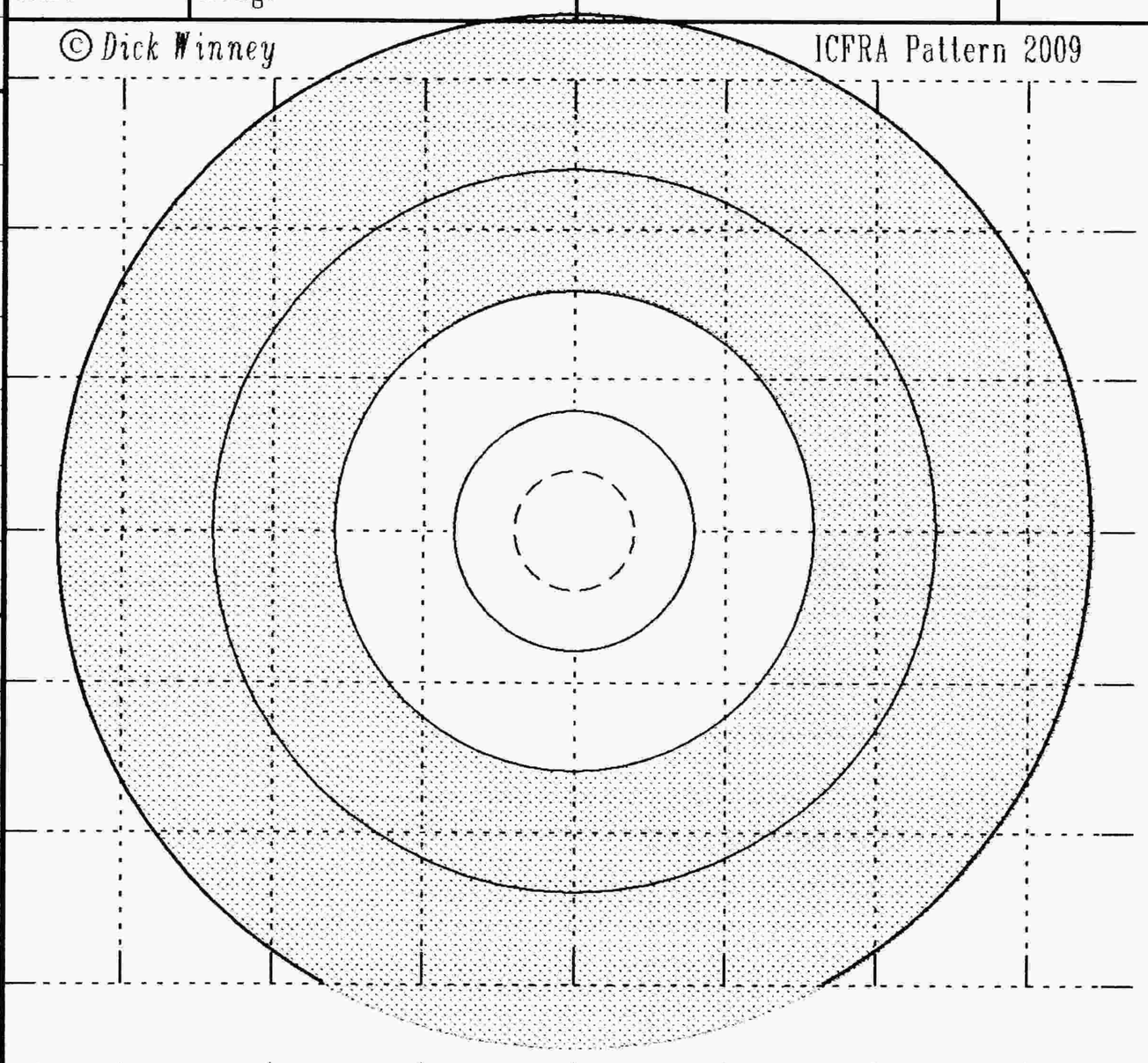

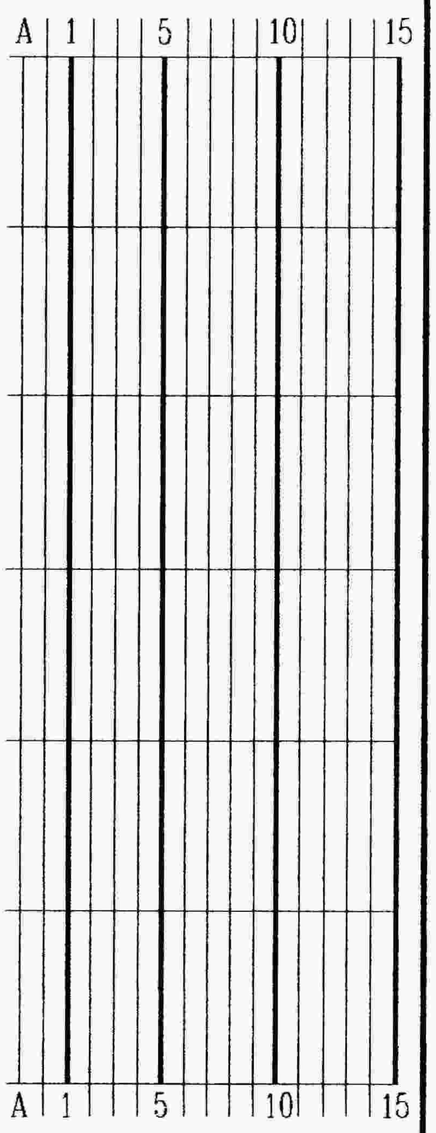

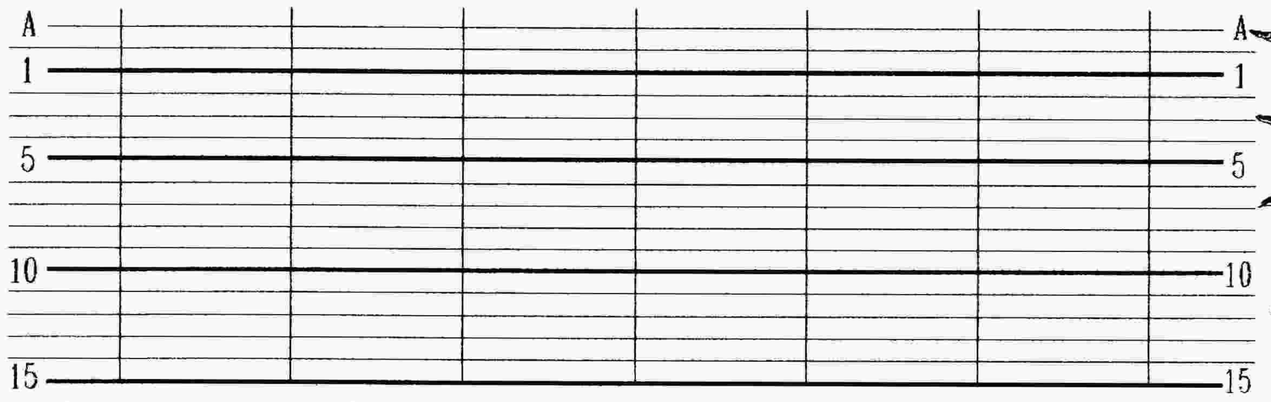

WIND 155gr	1o'c	2o'c	3o'c
VS	2	3	$3\frac{1}{2}$
Str	$1\frac{1}{2}$	$2\frac{1}{2}$	$2\frac{3}{4}$
Fr	1	$1\frac{3}{4}$	$2\frac{1}{4}$
Mod	$\frac{3}{4}$	1	$1\frac{1}{4}$
Sl	$\frac{1}{4}$	$\frac{1}{2}$	$\frac{3}{4}$

RISE 200y $3\frac{1}{2}$